Leica Nova
MS60 and TS60
Equipment List

PART OF HEXAGON

- when it has to be **right**

Leica Geosystems

Table of Contents

MultiStation and Total Stations 5

1 MultiStation 5
1.1 Models 5
1.2 Angular Accuracies 5

2 Total Stations 6
2.1 Models 6
2.2 Angular Accuracies 6

Additional Options & Accessories 7

3 Additional Options 7
3.1 Calibration and Producer Certificates 7
3.2 Camera Calibration 7

4 Leica Captivate Apps & Software Options 7
4.1 Leica Captivate Software for TS/MS 7
4.2 Apps included in Leica Captivate for TS/MS (827 646) 7
4.3 Optional Apps for Leica Captivate for TS/MS 8
4.4 Optional Licences for Leica Captivate for TS/MS 8

Accessories 9

5 Power Supply 9
5.1 Internal Batteries 9
5.2 External Batteries 9
5.3 Battery Chargers 9

6 Data Storage and Data Transfer 9
6.1 Memory Devices 9
6.2 Card Reader 9

7 Connectivity 10
7.1 Connector Types 10
7.2 Cables 10

8 Optical Accessories 10
8.1 Eyepiece 10
8.2 Autocollimation Set 10
8.3 Objective 11

9 Instrument Height Meter 11

10 Tribrachs 11

11 Tripods 11

12 Reflector Poles 11
12.1 Standard Poles 11
12.2 Hidden Point Pole 12
12.3 Mini Pole 12

13 Reflector Carriers 12

14 Reflectors 12
14.1 Circular Reflectors 12
14.2 360° Reflectors 12
14.3 Precision Reflectors 12
14.4 Mini Reflectors 12
14.5 Reflector Tapes 13
14.6 Pen and Screen Protections Foils 13

15 Additional Containers & Accessories for Containers 13

Remote Control 14

16 Remote Control - CS20 Field Controller 14
16.1 CS20 Field Controller 14
16.2 CTR20 TS Communication Expansion Pack 14

17 Leica Captivate Software and Apps - CS20 Field Controller 14
17.1 Leica Captivate Software for CS20 Field Controller 14
17.2 Apps included in Leica Captivate for CS20 Field Controller 14
17.3 Optional Apps for Leica Captivate for CS20 Field Controller 15
17.4 Optional Licences for Leica Captivate for CS20 Field Controller 15

18 CS35 Tablet 16
18.1 CS35 Tablet 16
18.2 CTR35 Long-range Radio Device 16

19 Leica Captivate Software and Apps - CS35 Tablet 16
19.1 Leica Captivate Software for CS35 Tablet 16
19.2 Apps included in Leica Captivate for CS35 Tablet 16
19.3 Optional Applications for Leica Captivate for CS35 Tablet 17
19.4 Optional Licences for Leica Captivate for CS35 Tablet 17

Accessories for Field Controller 18

20 Accessories for CS20 Field Controller 18
20.1 Internal Batteries 18
20.2 Battery Chargers 18
20.3 Memory Devices 18
20.4 Card Reader & Adapter 18
20.5 Pen and Screen Protections Foils 18
20.6 Additional Power Accessories 18
20.7 Pole & Tripod Accessories 18
20.8 Utility Hook and Hand Strap 19

21 Accessories for CS35 Tablet 19
21.1 Internal Batteries 19
21.2 Battery Chargers 19
21.3 Pen and Screen Protection Foils 19
21.4 Pole Accessories 19
21.5 Hand Strap 19

22 RadioHandles and TCPS Modems 20
22.1 RadioHandles 20
22.2 TCPS Modems 20
22.3 TCPS Accessories 20
22.4 Cables for TCPS Radio Modems 20

SmartPole & SmartStation 21

23 SmartStation & SmartPole Setup using GS15 GNSS Receiver 21
23.1 GS15 GNSS Receiver 21
23.2 SmartAntenna Adapter 21

24 SmartStation & Smartpole Setup using a GS16 GNSS Receiver 22
24.1 GS16 GNSS Receiver 22
24.2 SmartAntenna Adapter 22

Care Packages 23

25 Customer Care Packages 23

Trademarks & Technical Data 24

26 Trademarks 24
27 Technical Data 24

Suggested Equipment Setups 25

28 Scanning using a MultiStation 25

29 Conventional Surveying 26

29.1 Two Person Surveying using a Leica Nova TPS 26
29.2 Robotic Surveying using a Leica Nova TPS and CS20 Field Controller 27
29.3 Robotic Surveying using a Leica Nova TPS and CS35 Tablet 28

30 SmartPole Surveying 29

30.1 SmartPole using the GS16 GNSS Receiver and CS20 Field Controller 29
30.2 SmartPole using the GS16 GNSS Receiver and CS35 Tablet 30
30.3 SmartPole using the GS15 GNSS Receiver and CS20 Field Controller 31
30.4 SmartPole using the GS15 GNSS Receiver and CS35 Tablet 32

31 SmartStation 33

31.1 SmartStation using the GS16 GNSS Receiver 33
31.2 SmartStation using the GS15 GNSS Receiver 34

MultiStation and Total Stations

1 MultiStation

1.1 Models

	MS60
Angle measurement	●
Distance measurement to prism	●
Distance measurement to any surface (R1000)	-
Long Range distance measurement to any surface (R2000)	●
High speed 1000Hz EDM	●
Motorised	●
Automatic Target Recognition (ATRplus)	●
Lock mode	●
PowerSearch (PS)	●
Guide Light (EGL)	●
Servofocus	●
Autofocus	●
5 Megapixel imaging	●
Overview Camera	●
Telescope Camera	●
WLAN	●
Bluetooth	●
RS232/USB interface	●
2 GB internal flash memory	●
Hotshoe Interface for RadioHandle	●
SmartStation GS15 GNSS receiver	○
SmartStation GS16 GNSS receiver	○
CS20 Field Controller (with internal TS communication module)	○
CS20 with CTR20 TS communication expansion pack	○
CS35 Tablet (with internal Bluetooth v4.0)	○

● Standard
○ Optional
- Not available

1.2 Angular Accuracies

		MS60
1"	(0.3mgon)	822 431

MS60 MultiStations are delivered with two 5" WVGA colour touch screens, Quick Guide, documentation USB card (833 146) and upright container GVP727 (817 060).

2 Total Stations

2.1 Models

	TS60 I
Angle measurement	●
Distance measurement to prism	●
Distance measurement to any surface (R1000)	●
Long Range distance measurement to any surface (R2000)	-
High speed 1000Hz EDM	-
Motorised	●
Automatic Target Recognition (ATRplus)	●
Lock mode	●
PowerSearch (PS)	●
Guide Light (EGL)	●
Servofocus	●
Autofocus	●
5 Megapixel imaging	●
Overview Camera	●
Telescope Camera	●
WLAN	●
Bluetooth	●
RS232/USB interface	●
2 GB internal flash memory	●
Hotshoe Interface for RadioHandle	●
SmartStation GS15 GNSS receiver	○
SmartStation GS16 GNSS receiver	○
CS20 Field Controller (with internal TS communication module)	○
CS20 with CTR20 TS communication expansion pack	○
CS35 Tablet (with internal Bluetooth v4.0)	○

● Standard
○ Optional
- Not available

2.2 Angular Accuracies

		TS60 I
0.5"	**(0.15mgon)**	822 430

TS60 Total Stations are delivered with two 5" WVGA colour touch screens, Quick Guide, documentation USB card (833 146) and upright container GVP726 (817 059).

Additional Options & Accessories

3 Additional Options

3.1 Calibration and Producer Certificates

812 535	Calibration Certificate “Gold”, Angle
812 536	Calibration Certificate “Gold”, A + Dist IR
812 539	Calibration Certificate “Gold”, A + Dist, IR&RL
812 542	Calibration Certificate “Silver”, Angle
812 543	Calibration Certificate “Silver”, A + Dist, IR
812 544	Calibration Certificate “Silver”, A + Dist, IR&R

Calibration Certificate “Blue” (812 541) is always included in initial order (myWorld download).

For Service Calibration Certificates see Standard Service Products (SSPs) document.

3.2 Camera Calibration

793 861	Overview Camera calibration workflow. Article ensures the predelivery logistics for the calibration of the Overview Camera of the Leica Nova TPS. 3rd party fees for instrument calibration and licensing of software are not included.

4 Leica Captivate Apps & Software Options

4.1 Leica Captivate Software for TS/MS

827 646	Leica Captivate Measure & Stake for TS/MS.

4.2 Apps included in Leica Captivate for TS/MS (827 646)

	Measure includes: • Measure • Code points • Automatically measure points • Remote Heights • Target Offset calculations
	Setup includes: • Get station coordinates from GNSS, from Job or enter manually • Orientation by known Azimuth • Orientation by known Backsight • Orientation & Height transfer to up to 10 target points • Resection up to 10 target points • Resection Helmert • Orientation to Line
	Stake points includes: • Navigate to point using various methods: from and behind instrument, point, base line, arrow, North • Quality control - checking of coordinate differences before storing • Automatically select next closest point • Graphical selection of point from map • Edit heights and offset heights of points • Acoustic beep getting faster when getting closer to point

	COGO includes: • Inverse • Traverse • Intersections • Angle calculations • Line & arc calculations • Bearing & distance calculations • Shift, Rotate, Scale (manual & matching points) • Triangle calculations
	Determine coordinate system: • 1 step, 2 step, 3D Transformation • All common projections
	Alignment Editor: • Horizontal alignments • Vertical alignments • Cross sections • Chainage equations
	Control Data: • Create points and lines
	Data import: ASCII, XML, DXF, DTM, alignments
	Data export: ASCII, Custom, DXF, XML, Style Sheets, FBK, RW5, RAW and local formats

4.3 Optional Apps for Leica Captivate for TS/MS

☞ The following apps require a valid license key.

834 221	**Athletics**
827 650	**Area Division**
827 651	**Stake DTM**
827 648	**Measure and Stake to Line**
827 649	**Measure to Plane / Grid**
827 653	**Check and Stake Road**
827 654	**Check and Stake Tunnel**
827 655	**Check and Stake Rail**
827 658	**Sets of Angles**
827 652	**Volume Calculation**
827 656	**Hidden Point**
827 657	**Traverse**
827 659	**QuickVolume**
834 229	**Auto Setup**
834 230	**Remote Monitoring**
836 522	**Machine Control Guidance**
839 678	**Inspect surfaces**
836 669	**Tunnel Profile Generator**

4.4 Optional Licences for Leica Captivate for TS/MS

827 661	**Leica Active Assist**
827 662	**Leica Exchange**

Accessories

5 Power Supply

5.1 Internal Batteries

793 975	**GEB242**	Lithium-Ion battery, 14.8V/5.8Ah, rechargeable, for Leica Nova TPS.

5.2 External Batteries

818 916	**GEB371**	External universal battery, Li-Ion, 13 V, 250 Wh, rechargeable.
807 696	**GEV270**	Power supply unit for TPS/GNSS/DNA. For indoor use only. Input 100-240VAC to output 13.2VDC, with connection for power cables. ☞ Requires a GEV219, GEV220 or GEV261 cable for Nova instruments.

5.3 Battery Chargers

799 185	**GKL311**	Single-bay Charger Professional 3000. Charger for one Li-Ion battery (GEB211, GEB212, GEB221, GEB222, GEB241, GEB242 and GEB331), including AC/DC adaptor and cigarette lighter cable.
799 187	**GKL341**	Multi-bay Charger Professional 5000. Charges up to 4 batteries (GEB211, GEB212, GEB221, GEB222, GEB241, GEB242 and GEB331), including power cable.
734 389	**GDC221**	Car adapter for the GKL341 charger. Allows the use of the GKL341 with a cigarette lighter; 12V/24V DC/DC converter. Can also be used to power CS15 field controller directly from a cigarette lighter.
774 437	**GEV242**	Charger for GEB371 external battery.

6 Data Storage and Data Transfer

6.1 Memory Devices

767 856	**MSD1000**	SD memory card 1GB for Leica Viva TPS and Leica Nova instruments and CS10/CS15 field controller, industrial grade.
789 139	**MSD08**	SD memory card 8GB for Leica Viva TPS and Leica Nova instruments and CS10/CS15 field controller, industrial grade.
765 199	**MS1**	USB memory stick, 1GB, for Leica Viva TPS and Leica Nova instruments and CS10/CS15 field controller, industrial grade.

6.2 Card Reader

767 895	**MCR7**	Card reader for SD/CF cards.

7 Connectivity

7.1 Connector Types

Name	Used on	
Lemo1 5-pin	Battery / External power	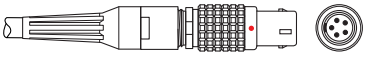
Lemo1 8-pin	Leica Nova TPS / Leica Viva field controllers	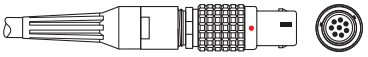
Lemo1 8-pin	External TS radios	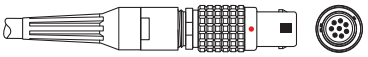
USB A	PC / Laptop	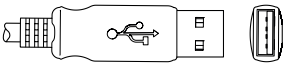
9-pin RS232 serial	PC / Laptop	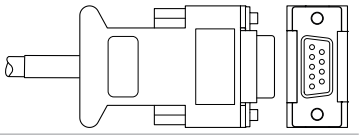

7.2 Cables

439 038	**GEV71**	Car battery cable, connects 12V car battery connector to Lemo1 5-pin female.
733 282	**GEV162**	Serial data cable for communication to PC, connects Lemo1 8-pin to 9-pin RS232 serial.
733 283	**GEV163**	Serial data cable for communication between TS and CS, connects Lemo1 8-pin to Lemo1 8-pin.
758 469	**GEV219**	Power cable between TS and battery, Lemo1 5-pin to Lemo1 8-pin.
759 257	**GEV220**	Serial data Y-cable, connects Lemo1 8-pin connector to PC (9-pin RS232 serial) and external battery (Lemo1 5pin), 2m.
767 899	**GEV234**	USB data cable for communication to PC, Lemo1 8-pin to USB A connector.
771 057	**GEV236**	Serial data Y-cable for TS robotic setup, Lemo1 5-pin (battery) to Lemo1 8-pin (instrument) and Lemo1 8-pin (external TS radio).
772 807	**GEV237**	USB data cable for communication between TS and CS, Lemo1 8-pin to USB connector, Lemo1 8-pin (TS) to Lemo1 8-pin (CS).
793 364	**GEV261**	USB data X-cable for communication to PC, connects Lemo1 8-pin to PC USB A connector (USB data) and PC 9-pin RS232 connector (serial data) and external battery (Lemo1 5-pin).
806 095	**GEV269**	Serial data transfer cable, converter cable USB A to Lemo1 8-pin, connects TS to PC, PC driver included on CD.

8 Optical Accessories

8.1 Eyepiece

377 802	**FOK53**	Magnification eyepiece, additional eyepiece for increasing telescope magnification to 42x. ☞ Modification in a workshop necessary.
308 838	**FOK53**	Magnification eyepiece, additional eyepiece for increasing telescope magnification to 42x. ☞ Modification ex factory. Can only be ordered with a new instrument.
793 979	**GFZ3**	Diagonal eyepiece for telescope with bayonet connection.
376 236	**GOK6**	Eyepiece for steep sights, with joint allowing variable sighting angle.

8.2 Autocollimation Set

199 899	**GOA2**	Autocollimation eyepiece.
394 787	**GEB62**	Plug-in lamp, with cable for autocollimation eyepiece.
394 792	**GEB63**	Battery box for autocollimation eyepiece and eyepiece lamp.

8.3 Objective

743 504	**GVO13**	Objective solar filter for TPS instruments.

9 Instrument Height Meter

667 718	**GHM007**	Instrument height meter.
722 045	**GHT196**	Distance holder for height meter.
60100179		Height Meter set including GHM007 Instrument height meter and GHT196 Distance holder for height meter.

10 Tribrachs

777 508	**GDF321**	Tribrachs Series 5000, without optical plummet.
777 509	**GDF322**	Tribrachs Series 5000, with optical plummet.
748 888	**GDF111-1**	Tribrachs Series 3000, without optical plummet.
798 181	**GDF112-1**	Tribrachs Series 3000, with optical plummet.

11 Tripods

296 632	**GST20**	Heavy duty tripod, with side clamp screws, carrying strap and plumb bob.
394 752	**GST20-9**	Heavy duty tripod, with side clamp screws and carrying strap.
667 301	**GST120-9**	Heavy duty tripod, self-closing, with side clamp screws and carrying strap.
332 200	**GST4**	Tripod-star, for setting up tripods on hard and slippery surfaces.

12 Reflector Poles

12.1 Standard Poles

754 391	**GLS12**	Reflector pole, telescopic to 2.00m with circular bubble, cm graduations.
754 389	**GLS12F**	Reflector pole, telescopic to 2.00m with circular bubble, ft graduations.
766 359	**GLS31**	Reflector carbon-fibre pole with circular bubble and twist lock. Snap-locks at 2.00m, 1.80m and 1.50m for GNSS antennas with GAD31 adapter or GRZ122 reflector (SmartPole setup).
385 500	**GLS11**	Reflector pole, telescopic, with circular bubble, cm and ft graduation, extends to 2.15m.
667 309	**GLS111**	Reflector pole, with bull's-eye bubble, cm/ft graduation, extends to 2.60m, with red/white 0.20m graduations.
667 310	**GLS112**	Reflector pole, with bull's-eye bubble, cm/ft graduation, extends to 3.65m, with red/white 0.20m graduations.
555 720	**GSR2**	Dual-strut support for GLS11 plumbing pole.
667 319	**GSR111**	Dual-strut support for all GLS.
403 428	**GZW12**	Extension 1m long, for reflector pole GLS11 and carriers.

12.2 Hidden Point Pole

742 329	**GMP112**	Hidden Point pole extension for GMP111 (mini prism pole set). Includes mini prism with holder and 30cm adapter pole. ☞ Additional GMP111 Mini prim (641 615) required for complete Hidden Point pole set with two prisms.

12.3 Mini Pole

403 427	**GLS14**	Mini reflector pole, (prism/target 20cm over point), with circular bubble.

13 Reflector Carriers

667 313	**GRT144**	Carrier with stub.
667 316	**SNLL121**	Precision carrier, with longitudinal bubble and zenith-nadir laser plummet.
428 340	**GZR3**	Precision carrier, with longitudinal bubble and optical plummet.
725 566	**GZR103**	Carrier, with longitudinal bubble and optical plummet, for reflectors and GPS antenna.
667 217	**GAD31**	Screw-to-stub adapter for fitting GPS antenna on carriers with stub and poles with stub.

14 Reflectors

14.1 Circular Reflectors

641 617	**GPR121**	Circular prism, with metal holder and target plate.
362 830	**GPR1**	Circular prism, in black housing.
362 820	**GPH1**	Single-prism holder.
362 823	**GZT4**	Target plate, for GPH1.

14.2 360° Reflectors

754 384	**GRZ122**	360° reflector with 5/8" thread adapter for mounting of GPS antenna.
639 985	**GRZ4**	360° reflector.
644 327	**GRZ101**	360° mini prism with 1/4" thread fitting. Not supported by PowerSearch.
756 637	**MPR122**	360° reflector with 5/8" thread adapter and 5/8" screw nut.
742 006	**GAD103**	Adapter for attaching GRZ101 to all poles with Leica Geosystems stub.

14.3 Precision Reflectors

555 631	**GPH1P**	Single-prism precision reflector.

14.4 Mini Reflectors

641 662	**GMP101**	Mini prism, incl. bubble, target plate and spike, in bag, also suitable for GLS11/GLS12 and GRT144 (same height as GPH1, additive constant +17.5mm).
641 762	**GMP104**	Mini prism, with L-bar, for fixed installations.

14.5 Reflector Tapes

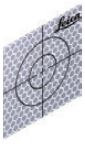

763 532	**GZM29**	Reflective tape, 20x20mm for short range, pack of 20 pieces.
763 533	**GZM30**	Reflective tape, 40x40mm for medium range, pack of 20 pieces.
763 534	**GZM31**	Reflective tape, 60x60mm for long range, pack of 20 pieces.

14.6 Pen and Screen Protections Foils

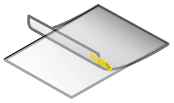

Extra pen		
813 914	**GDZ71**	Pen with tether clip interface for CS20 field controller and TS16/MS60/TS60 instruments.
Screen Protection Foil set		
813 781	**SPF05**	5" WVGA screen protection foils for CS20 field controller and TS16/MS60/TS60 instruments.

15 Additional Containers & Accessories for Containers

727 589	**GVP102**	Soft bag with shoulder strap, for prism station, consist of tribrach, prism carrier or laser plummet and prism.
667 451	**GVP609**	Container for 2 circular prisms GPR111/121, 2 carriers/laser plummets and 2 tribrachs.
833 516	**GVP716**	Backpack carrying systems for all large TPS and GNSS containers.
833 517	**GVP717**	Sidebag for container GVP721/722/723/725.
833 518	**GVP718**	Basic backstrap for container GVP721/722/723/725.
833 519	**GVP719**	Shoulderstrap for container GVP721/722/723/725.
817 055	**GVP722**	Hard container for SmartAntenna, CS Field Controller and accessories for a SmartPole and SmartStation setup.
817 057	**GVP724**	Small-sized hard container for 360° prism and controller for TS Robotic Pole setup.

Remote Control

16 Remote Control - CS20 Field Controller

16.1 CS20 Field Controller

823 165	**CS20 3.75G**	**CS20 3.75G Field Controller** Ruggedized WinEC7 field controller with 5" WVGA touch display, 2 GB eMMC Flash Memory, 1 GB SDRAM, SD card slot, 5MP camera and LED flash. Includes internal Bluetooth/WLAN module, 3.75G GSM/UMTS module, internal TS communication module, QWERTY keypad, stylus.
823 169	**CS20 3.75G Disto**	**CS20 3.75G Disto Field Controller** Ruggedized WinEC7 field controller with 5" WVGA touch display, 2 GB eMMC Flash Memory, 1 GB SDRAM, SD card slot, 5MP camera and LED flash. Includes internal Bluetooth/WLAN module, 3.75G GSM/UMTS module, internal TS communication module, integrated Disto-Lasermeter, QWERTY keypad, stylus.
823 167	**CS20 CDMA Disto**	**CS20 CDMA Disto Field Controller** Ruggedized WinEC7 field controller with 5"WVGA touch display, 2 GB eMMC Flash Memory, 1 GB SDRAM, SD card slot, 5MP camera and LED flash. Includes internal Bluetooth/WLAN module, 3.75G GSM/UMTS/CDMA module, internal TS communication module, integrated Disto-Lasermeter, QWERTY keypad, stylus.

16.2 CTR20 TS Communication Expansion Pack

Not available in EU countries due to EN 300 328 V.1.8.1.

Recommended only for robotic applications systematically exceeding ranges beyond 400 m.

6010023		**CTR20 expansion pack set** TS communication expansion pack set including CTR20 module and GAT25 radio antenna.
808 038	**CTR20**	**CTR20 TS communication expansion pack** CTR20 TS communication expansion pack with integrated radio module for CS20 3.75G field controller variants. Used to establish long range radio connection between CS20 3.75G field controller and TS Total Stations equipped with RH16. GAT25 radio antenna not included (frequency range 2402 - 2480 MHz). Requires a GAT25 radio antenna.
812 027	**GAT25**	**GAT25 radio antenna for CTR20 module** Radio antenna for CTR20 long range TS communication module (frequency range 2402 - 2480 MHz).

17 Leica Captivate Software and Apps - CS20 Field Controller

17.1 Leica Captivate Software for CS20 Field Controller

827 698	Leica Captivate - Measure and Stake for CS20.

17.2 Apps included in Leica Captivate for CS20 Field Controller

The following apps are included in Leica Captivate for CS20 (827 698).

	Measure includes: • Measure • Code points • Automatically measure points • Remote Heights • Target Offset calculations
	Setup includes: • Get station coordinates from GNSS, from Job or enter manually • Orientation by known Azimuth • Orientation by known Backsight • Orientation & Height transfer to up to 10 target points • Resection up to 10 target points • Resection Helmert • Orientate to object

	Stake points includes: • Navigate to point using various methods: from and behind instrument, point, base line, arrow, North • Quality control - checking of coordinate differences before storing • Automatically select next closest point • Graphical selection of point from map • Edit heights and offset heights of points • Acoustic beep getting faster when getting closer to point
	COGO includes: • Inverse • Traverse • Intersections • Angle calculations • Line & arc calculations • Bearing & distance calculations • Shift, Rotate, Scale (manual & matching points) • Triangle calculations
	Determine coordinate system: • 1 step, 2 step, 3D Transformation • All common projections
	Alignment Editor: • Horizontal alignments • Vertical alignments • Cross sections • Chainage equations
	Control data: Create points and lines
	Data import: ASCII, XML, DXF, DTM, alignments
	Data export: ASCII, Custom, DXF, XML, Style Sheets, FBK, RW5, RAW and local formats
	3rd party total station control: • Topcon total station control • Nikon total station control • SOKKIA total station control

17.3 Optional Apps for Leica Captivate for CS20 Field Controller

☞ The following apps require a valid license key.

834 296	**Athletics**
827 701	**Area Division**
827 702	**Stake DTM**
827 699	**Measure and Stake to Line**
827 700	**Measure to Plane / Grid**
827 704	**Check and Stake Road**
827 705	**Check and Stake Tunnel**
827 706	**Check and Stake Rail**
827 711	**Sets of Angles**
827 703	**Volume Calculation**
827 708	**Hidden Point**
827 709	**Traverse**
827 712	**QuickVolume**
834 305	**Auto Setup**
839 679	**Inspect Surfaces**
836 670	**Tunnel Profile Generator**

17.4 Optional Licences for Leica Captivate for CS20 Field Controller

827 714	**Active Assist**
827 715	**Leica Exchange**

18 CS35 Tablet

18.1 CS35 Tablet

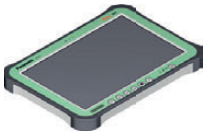

848 130	**CS35-1**	**CS35-1 10" Tablet, EU, RU, AUS** Ruggedized Win10 64-bit tablet computer including: 10" touch-widescreen, 128 GB SSD hard drive, 8 GB SDRAM, WLAN 802.11 b/g/n/a/ac, 4G integrated mobile broadband module, Bluetooth v4.1, stylus, 1x battery (4.1 Ah), AC/DC adaptor and 8MP camera with flash.
848 131	**CS35-2**	**CS35-2 10" Tablet, US, CA** Ruggedized Win10 64-bit tablet computer including: 10" touch-widescreen, 128 GB SSD hard drive, 8 GB SDRAM, WLAN 802.11 b/g/n/a/ac, 4G integrated mobile broadband module, Bluetooth v4.1, stylus, 1x battery (4.1 Ah), AC/DC adaptor and 8MP camera with flash.
848 134	**CS35-12**	**CS35-12 10" Tablet, JP** Ruggedized Win10 64-bit tablet computer including: 10" touch-widescreen, 128 GB SSD hard drive, 8 GB SDRAM, WLAN 802.11 b/g/n/a/ac, 4G integrated mobile broadband module, Bluetooth v4.1, stylus, 1x battery (4.1 Ah), AC/DC adaptor and 8MP camera with flash.

All CS35 Tablets are delivered with stylus, tether, one GEB235 Lithium-Ion battery (10.8 V/4.1 Ah, rechargeable) and country specific AC/DC adaptor.

18.2 CTR35 Long-range Radio Device

844 474	**CTR35**	Long-range radio device for CS35.

Recommended only for robotic applications requiring extended range.

19 Leica Captivate Software and Apps - CS35 Tablet

19.1 Leica Captivate Software for CS35 Tablet

827 719	Leica Captivate - Measure and Stake for CS35.

19.2 Apps included in Leica Captivate for CS35 Tablet

The following apps are included in Leica Captivate for CS35 (827 719).

	Measure includes: • Measure • Code points • Automatically measure points • Remote Heights • Target Offset calculations
	Setup includes: • Get station coordinates from GNSS, from Job or enter manually • Orientation by known Azimuth • Orientation by known Backsight • Orientation & Height transfer to up to 10 target points • Resection up to 10 target points • Resection Helmert • Orientate to object
	Stake points includes: • Navigate to point using various methods: from and behind instrument, point, base line, arrow, North • Quality control - checking of coordinate differences before storing • Automatically select next closest point • Graphical selection of point from map • Edit heights and offset heights of points • Acoustic beep getting faster when getting closer to point

	COGO includes: • Inverse • Traverse • Intersections • Angle calculations • Line & arc calculations • Bearing & distance calculations • Shift, Rotate, Scale (manual & matching points) • Triangle calculations
	Determine coordinate system: • 1 step, 2 step, 3D Transformation • All common projections
	Alignment Editor: • Horizontal alignments • Vertical alignments • Cross sections • Chainage equations
	Control data: Create points and lines
	Data import: ASCII, XML, DXF, DTM, alignments
	Data export: ASCII, Custom, DXF, XML, Style Sheets, FBK, RW5, RAW and local formats
	3rd party total station control: • Topcon total station control • Nikon total station control • SOKKIA total station control

19.3 Optional Applications for Leica Captivate for CS35 Tablet

☞ The following apps require a valid license key

827 722	**Area Division**
834 683	**Athletics**
834 691	**Auto Setup**
827 723	**Stake DTM**
827 720	**Measure and Stake to Line**
827 721	**Measure to Plane / Grid**
827 725	**Check and Stake Road**
827 726	**Check and Stake Tunnel**
827 727	**Check and Stake Rail**
827 730	**Sets of Angles**
827 724	**Volume Calculation**
827 728	**Hidden Point**
827 729	**Traverse**
827 731	**QuickVolume**
839 681	**Inspect Surfaces**
836 671	**Tunnel Profile Generator**

19.4 Optional Licences for Leica Captivate for CS35 Tablet

827 734	**Leica Exchange**

Accessories for Field Controller

20 Accessories for CS20 Field Controller

20.1 Internal Batteries

799 190	**GEB331**	Li-Ion battery, 11.1 V / 2.8 Ah, rechargeable, for CS20.

20.2 Battery Chargers

799 185	**GKL311**	Single-bay Charger Professional 3000. Charger for one Li-Ion battery (GEB211, GEB212, GEB221, GEB222, GEB241, GEB242 and GEB331), including AC/DC adaptor and cigarette lighter cable.
799 187	**GKL341**	Multi-bay Charger Professional 5000. Charges up to 4 batteries (GEB211, GEB212, GEB221, GEB222, GEB241, GEB242 and GEB331), including power cable.
734 389	**GDC221**	Car adapter for the GKL341 charger. Allows the use of the GKL341 with a cigarette lighter; 12V/24V DC/DC converter. Can also be used to power CS15 field controller directly from a cigarette lighter.

20.3 Memory Devices

767 856	**MSD1000**	SD memory card 1 GB for Leica Viva TPS and Leica Nova instruments and CS10/CS15 field controller, industrial grade.
789 139	**MSD08**	SD memory card 8 GB for Leica Viva TPS and Leica Nova instruments and CS10/CS15 field controller, industrial grade.
765 199	**MS1**	USB memory stick, 1 GB, for Leica Viva TPS and Leica Nova instruments and CS10/CS15 field controller, industrial grade.

20.4 Card Reader & Adapter

767 895	**MCR7**	Card reader for SD/CF cards.
733 258	**MCFAD1**	CompactFlash PC card adapter.

20.5 Pen and Screen Protections Foils

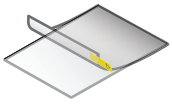

Pen		
813 914	**GDZ71**	Pen with tether clip interface for CS20 field controller and TS16/MS60/TS60 instruments.
813 582	**GHT76**	Tether to connect GDZ71 Pen to CS20 field controller.
Screen Protection Foil set		
813 781	**SPF05**	5" WVGA screen protection foils for CS20 field controller and TS16/MS60/TS60 instruments.

20.6 Additional Power Accessories

822 787	**GEV276**	Power supply unit for CS20, for indoor use only. Input 100-240 VAC to output 15.0 VDC, 40 W.

20.7 Pole & Tripod Accessories

807 157	**GHT66**	Holder attaching a CS20 with a GHT63 clamp to a pole. GHT63 is not included.
767 880	**GHT63**	Clamp arrangement for attaching the GHT66 and GHT78 to all poles.
845 832	**GHT70**	Holder for attaching a CS35 to a tripod with attached GHT78 tablet holder.

20.8 Utility Hook and Hand Strap

Utility hook		
807 245	**GHT68**	Utility hook for CS20 field controller for attaching to belt or tripod.
845 832	**GHT70**	Clamp arrangement for attaching the GHT66 and GHT78 to all tripods.
Hand strap		
807 158	**GHT67**	Hand strap for CS20 field controller.

21 Accessories for CS35 Tablet

21.1 Internal Batteries

832 119	**GEB235**	Lithium-Ion battery, 10.8 V/4.1 Ah, rechargeable, for CS35 Tablet.
832 120	**GEB236**	Lithium-Ion battery, 10.8 V/8.7 Ah, rechargeable, for CS35 Tablet.

☞ All CS35 Tablets are delivered with one GEB235 Lithium-Ion battery (10.8 V/4.1 Ah, rechargeable).

21.2 Battery Chargers

832 118	**GKL235**	Charger for CS35 batteries GEB235 and GEB236. Country specific AC/DC adaptor (GEV280-x) not included.
832 113	**GEV280-1**	AC/DC adaptor, EU. Power Supply for CS35 Tablet.
8321 14	**GEV280-2**	AC/DC adaptor, UK. Power Supply for CS35 Tablet.
832 115	**GEV280-3**	AC/DC adaptor, US. Power Supply for CS35 Tablet.
832 116	**GEV280-4**	AC/DC adaptor, AUS. Power Supply for CS35 Tablet.
832 117	**GEV280-5**	AC/DC adaptor, CH. Power Supply for CS35 Tablet.
842 648	**GEV280-6**	AC/DC adaptor, JP, Power Supply for CS35 Tablet.

☞ Country specific AC/DC adaptor (GEV280-x) is delivered with CS35 Tablet.

21.3 Pen and Screen Protection Foils

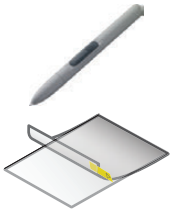

Pen		
832 121	**GDZ75**	Digitiser Pen for CS35 Tablet.
851 539	**GDZ76**	Digitiser Pen for CS35 Tablet, MK4 models.
832 122	**GHT77**	Tether to tie GDZ75 Digitiser Pen to CS35 Tablet.
Screen Protection Foil set		
832 126	**SPF06**	Screen protection foils for CS35 Tablet.

☞ All CS35 Tablets are delivered with one GDZ75 Digitiser Pen and a GHT77 Tether.

21.4 Pole Accessories

832 127	**GHT78**	Tablet holder for attaching a CS35 Tablet with a GHT63 clamp to a pole. GHT63 is not included.
767 880	**GHT63**	Clamp arrangement for attaching the GHT66 and GHT78 to all poles.

21.5 Hand Strap

833 343	**GHT79**	Hand strap for CS35 Tablet. Including 4 high corner guards.

22 RadioHandles and TCPS Modems

22.1 RadioHandles

788 853	**RH16**	RadioHandle with integrated Bluetooth module and radio antenna. Used as radio modem for Leica Viva TPS and Leica Nova instruments. Establishes communication to CS20/CS35 or CS15 field controller equipped with CTR16/17 or external radio modem TCPS29/30 attached to PC. Frequency range 2402 - 2480 MHz. Not available in EU countries due to EN 300 328 V.1.8.1.
818 467	**RH17**	RadioHandle with integrated long range Bluetooth module and radio antenna. Used as radio modem for Leica Viva TPS and Leica Nova instruments. Establishes communication to CS20/CS35 or CS15 field controller equipped with CTR16/17 or external radio modem TCPS29/30 attached to PC. Frequency range 2402 - 2480 MHz. Fulfills EN 300 328 V.1.8.1.

22.2 TCPS Modems

788 854	**TCPS29**	Bluetooth radio modem with antenna. Used as external radio modem for Leica Viva TPS and Leica Nova instruments or PCs. Frequency range 2402 - 2480 MHz. Not available in EU countries due to EN 300 328 V.1.8.1.
818 469	**TCPS30**	Bluetooth radio modem with antenna. Used as external radio modem for Leica Viva TPS and Leica Nova instruments or PCs. Frequency range 2402 - 2480 MHz. Fulfills EN 300 328 V.1.8.1.

22.3 TCPS Accessories

734 163	**GHT43**	Adapter for mounting TCPS radio module on GST20/GST120 tripod.

22.4 Cables for TCPS Radio Modems

For an overview of the different connector types, refer to chapter 7.1.

734 697	**GEV186**	Serial data Y-cable for TS Robotic setup, Lemo1 5-pin (battery) to Lemo0 5-pin (instrument) and Lemo1 8-pin (external TCPS radio).
707 525	**GK1**	Lemo Converter 30° for PC (9-pin RS232 serial). Use GK1 in combination with GEV186 to connect TCPS with PC for configuration or communication.
771 057	**GEV236**	Y-cable Lemo1 8-pin (CS20 Field Controller) to Lemo1 5-pin (battery) and Lemo1 8-pin (external TCPS radio), 1.8 m.

SmartPole & SmartStation

23 SmartStation & SmartPole Setup using GS15 GNSS Receiver

23.1 GS15 GNSS Receiver

838 040	**GS15**	**Leica GS15 Basic SmartAntenna**
838 041	**GS15**	**Leica GS15 Performance SmartAntenna**
838 042	**GS15**	**Leica GS15 Unlimited SmartAntenna**

	Leica GS15 Basic	Leica GS15 Performance	Leica GS15 Unlimited
Supported GNSS Systems			
Multi-frequency (L2, L5, L-band)	○	●	●
GLONASS	○	○	●
Galileo	○	○	●
BeiDou	○	○	●
RTK performance			
DGPS	○	●	●
RTK unlimited	○	●	●
Network RTK	○	●	●
SmartLink fill	○	○	●
SmartLink	○	○	○
Position update & data recording			
5 Hz positioning	●	●	●
20 Hz positioning	○	●	●
Raw data logging	●	●	●
RINEX logging	○	○	●
NMEA out	○	○	●
Additional features			
RTK Reference Station functionality	○	●	●

● Standard
○ Optional

23.2 SmartAntenna Adapter

767 802	**GAD110**	SmartAntenna adapter to mount GS15 and GS16 SmartAntenna. ☞ BT module to connect the TS to the GS15 and GS16 GNSS receiver is standard on all Leica Viva TPS and Leica Nova instruments.

☞ Please refer to the Leica Viva GNSS Equipment list for GS15 related options and accessories.

24 SmartStation & Smartpole Setup using a GS16 GNSS Receiver

24.1 GS16 GNSS Receiver

851 142	**GS16**	**Leica GS16 Basic SmartAntenna ***
843 496	**GS16**	**Leica GS16 3.75G Basic SmartAntenna**
838 033	**GS16**	**Leica GS16 3.75G Performance SmartAntenna**
838 037	**GS16**	**Leica GS16 3.75G Unlimited SmartAntenna**
843 497	**GS16**	**Leica GS16 3.75G & UHF Basic SmartAntenna**
838 034	**GS16**	**Leica GS16 3.75G & UHF Performance SmartAntenna**
838 035	**GS16**	**Leica GS16 3.75G & UHF Performance SmartAntenna (NAFTA)**
838 036	**GS16**	**Leica GS16 3.75G & UHF Performance SmartAntenna (JP)**
838 039	**GS16**	**Leica GS16 3.75G & UHF Unlimited SmartAntenna**

* Available in selected countries only.

	Leica GS16 Basic	Leica GS16 Performance	Leica GS16 Unlimited
Supported GNSS Systems			
Multi-frequency (L2, L5, L-band)	○	●	●
GLONASS	○	○	●
Galileo	○	○	●
BeiDou	○	○	●
RTK performance			
DGPS	○	●	●
RTK unlimited	○	●	●
Network RTK	○	●	●
SmartLink fill	○	○	●
SmartLink	○	○	○
Position update & data recording			
5 Hz positioning	●	●	●
20 Hz positioning	○	●	●
Raw data logging	●	●	●
RINEX logging	○	○	●
NMEA out	○	○	●
Additional features			
RTK Reference Station functionality	○	●	●

● Standard
○ Optional

24.2 SmartAntenna Adapter

767 802	**GAD110**	SmartAntenna adapter to mount GS15 and GS16 SmartAntenna. ☞ BT module to connect the TS to the GS15 and GS16 GNSS receiver is standard on all Leica Viva TPS and Leica Nova instruments.

☞ Please refer to the Leica Viva GNSS Equipment list for GS16 related options and accessories.

Care Packages

25 Customer Care Packages

	A wide selection of comprehensive Customer Care Packages (CCPs) is available bundling Hardware Maintenance, Software Maintenance, Customer Support and Extended Warranty. For more information about the CCP offering in your country please contact your local Leica Geosystems organization or distribution partner.

Trademarks & Technical Data

26 Trademarks

The *Bluetooth*® word mark and logos are owned by Bluetooth SIG, Inc. and any use of such marks by Leica Geosystems AG is under license.
SD and microSD are trademarks of the SD-3C, LLC.
Other trademarks and trade names are those of their respective owners.

27 Technical Data

Laser plummet:
Laser class 2 in accordance with IEC 60825-1 resp. EN 60825-1

Guide light (EGL):
LED class 1 in accordance with IEC 60825-1 resp. EN 60825-1

Distance meter (Prism, ATRplus and PowerSearch):
Laser class 1 in accordance with IEC 60825-1 resp. EN 60825-1

Distance meter (Non-Prism):
Laser class 3R in accordance with IEC 60825-1 resp. EN 60825-1

Suggested Equipment Setups

28 Scanning using a MultiStation

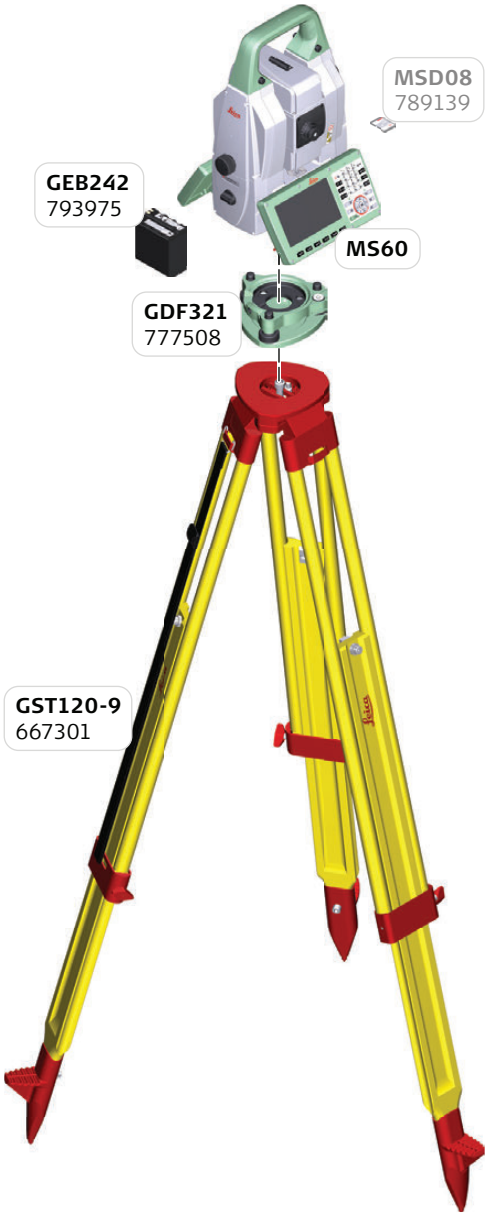

29 Conventional Surveying

29.1 Two Person Surveying using a Leica Nova TPS

29.2 Robotic Surveying using a Leica Nova TPS and CS20 Field Controller

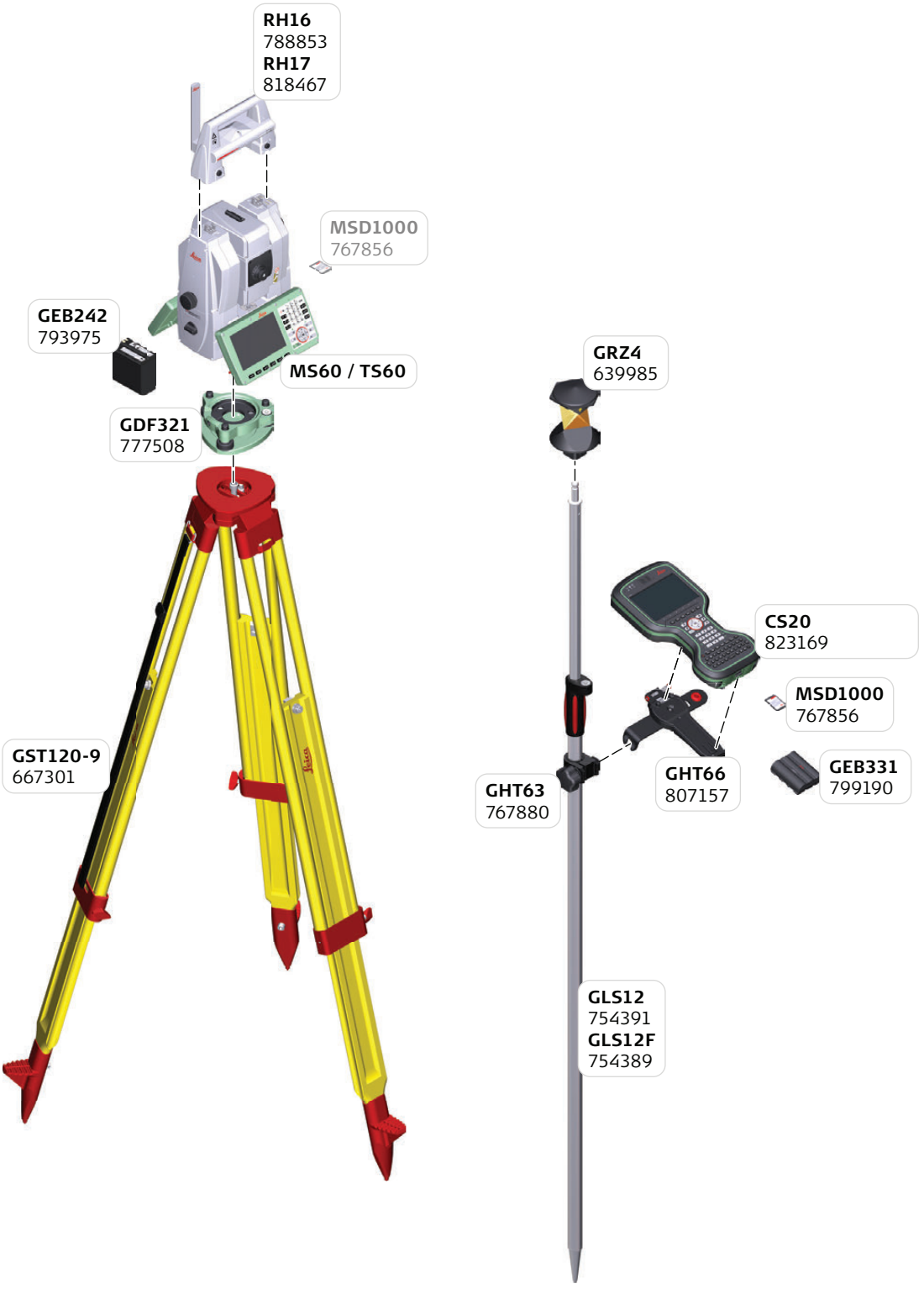

29.3 Robotic Surveying using a Leica Nova TPS and CS35 Tablet

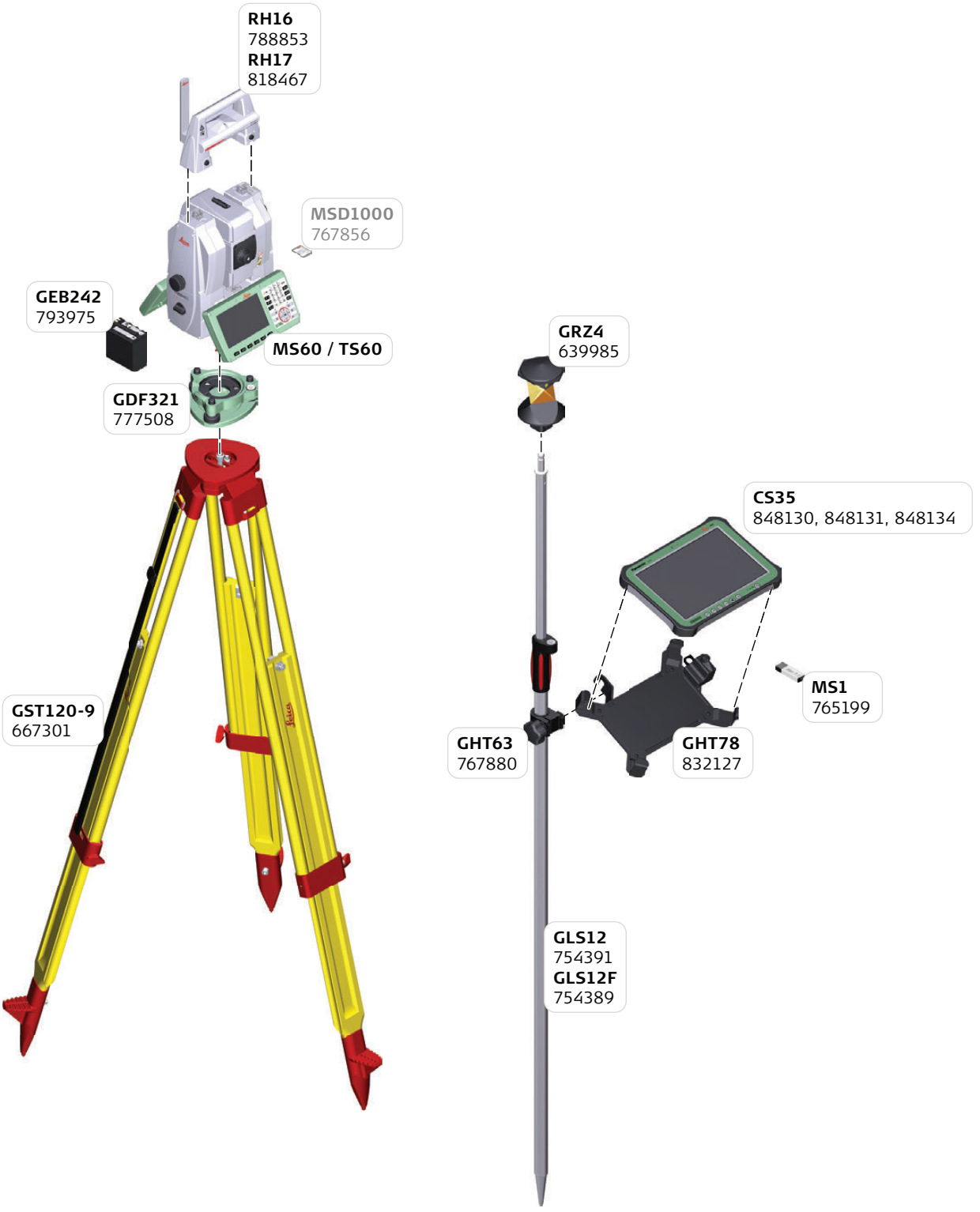

30 SmartPole Surveying

30.1 SmartPole using the GS16 GNSS Receiver and CS20 Field Controller

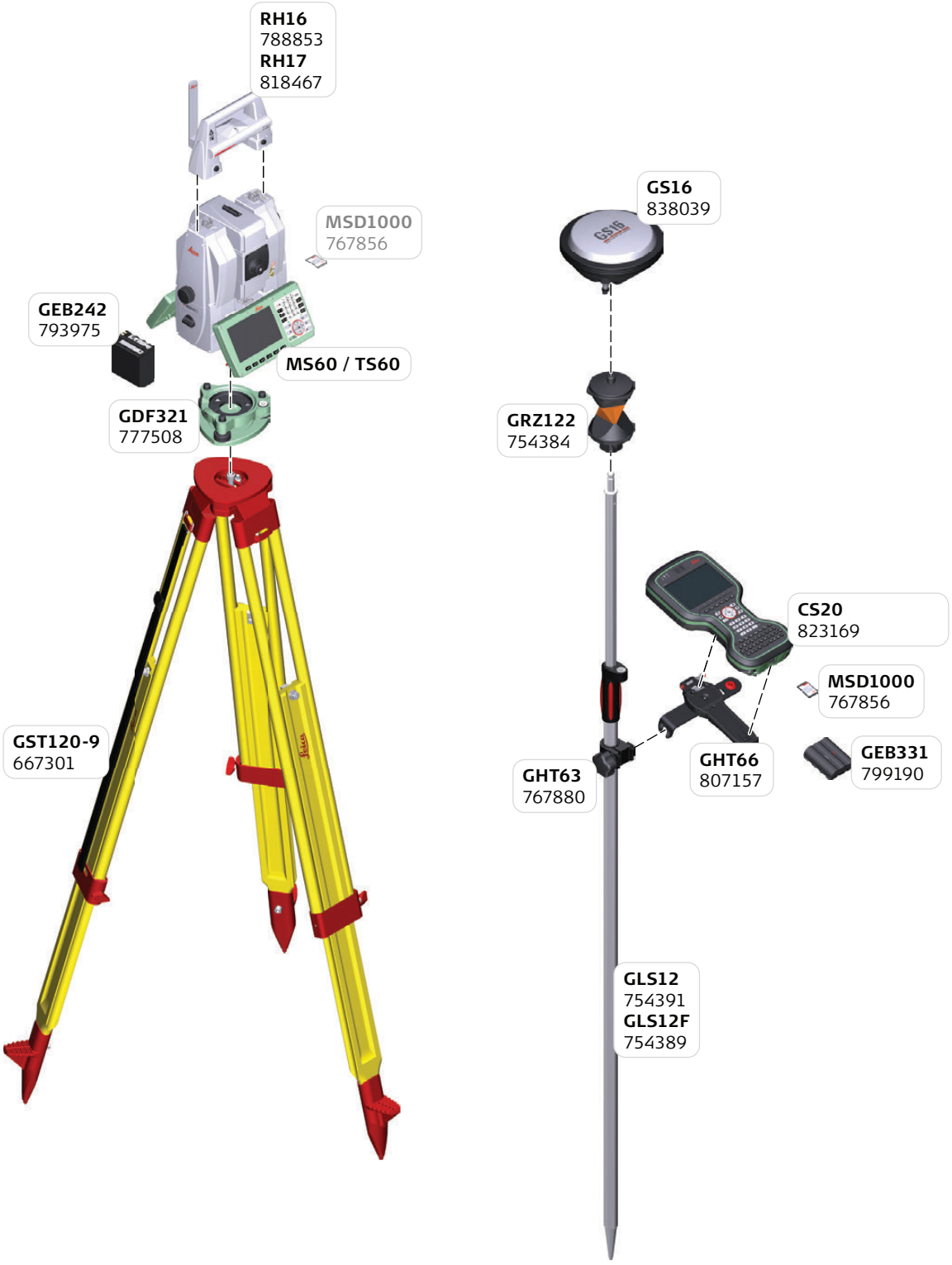

30.2 SmartPole using the GS16 GNSS Receiver and CS35 Tablet

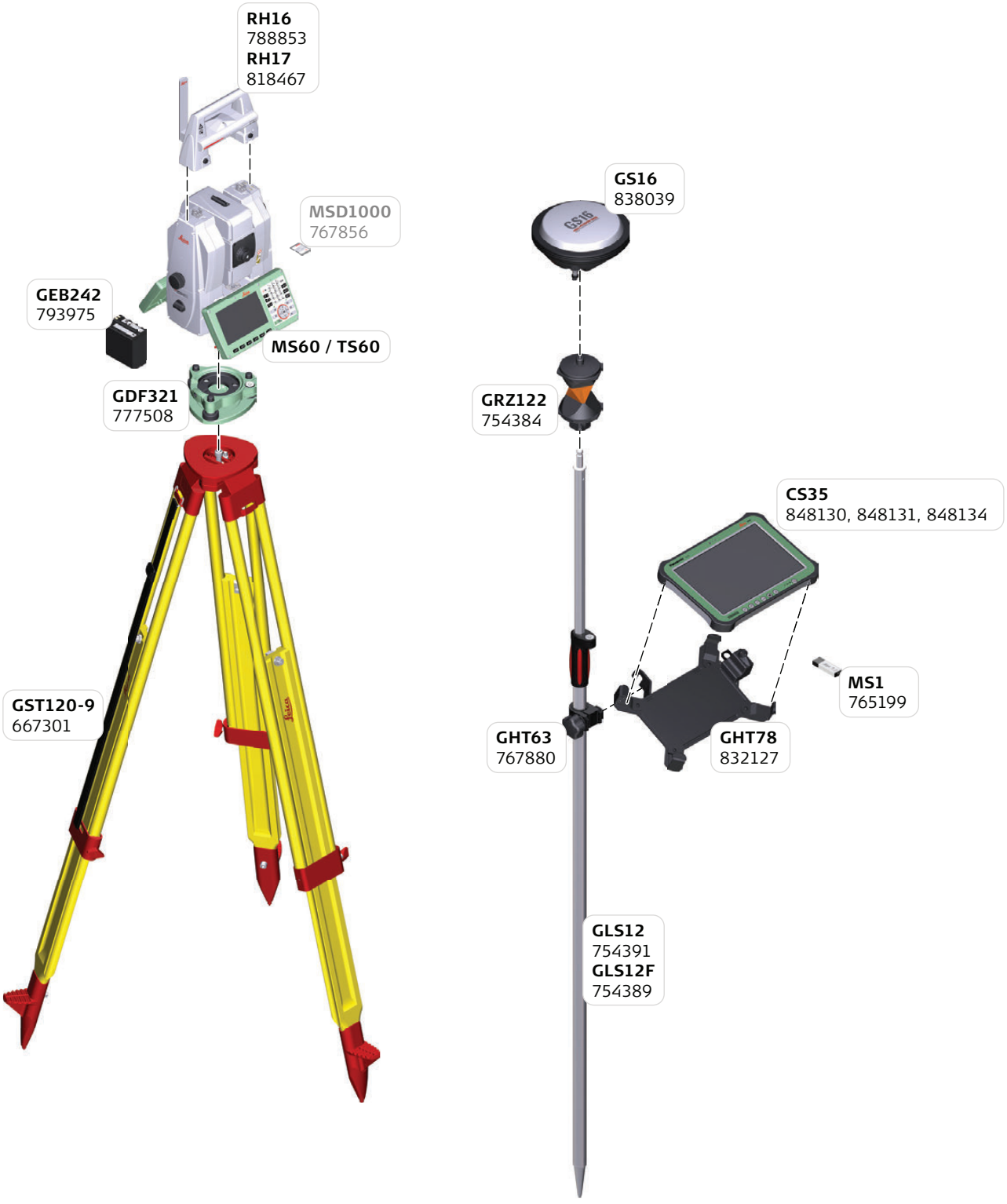

30.3 SmartPole using the GS15 GNSS Receiver and CS20 Field Controller

30.4 SmartPole using the GS15 GNSS Receiver and CS35 Tablet

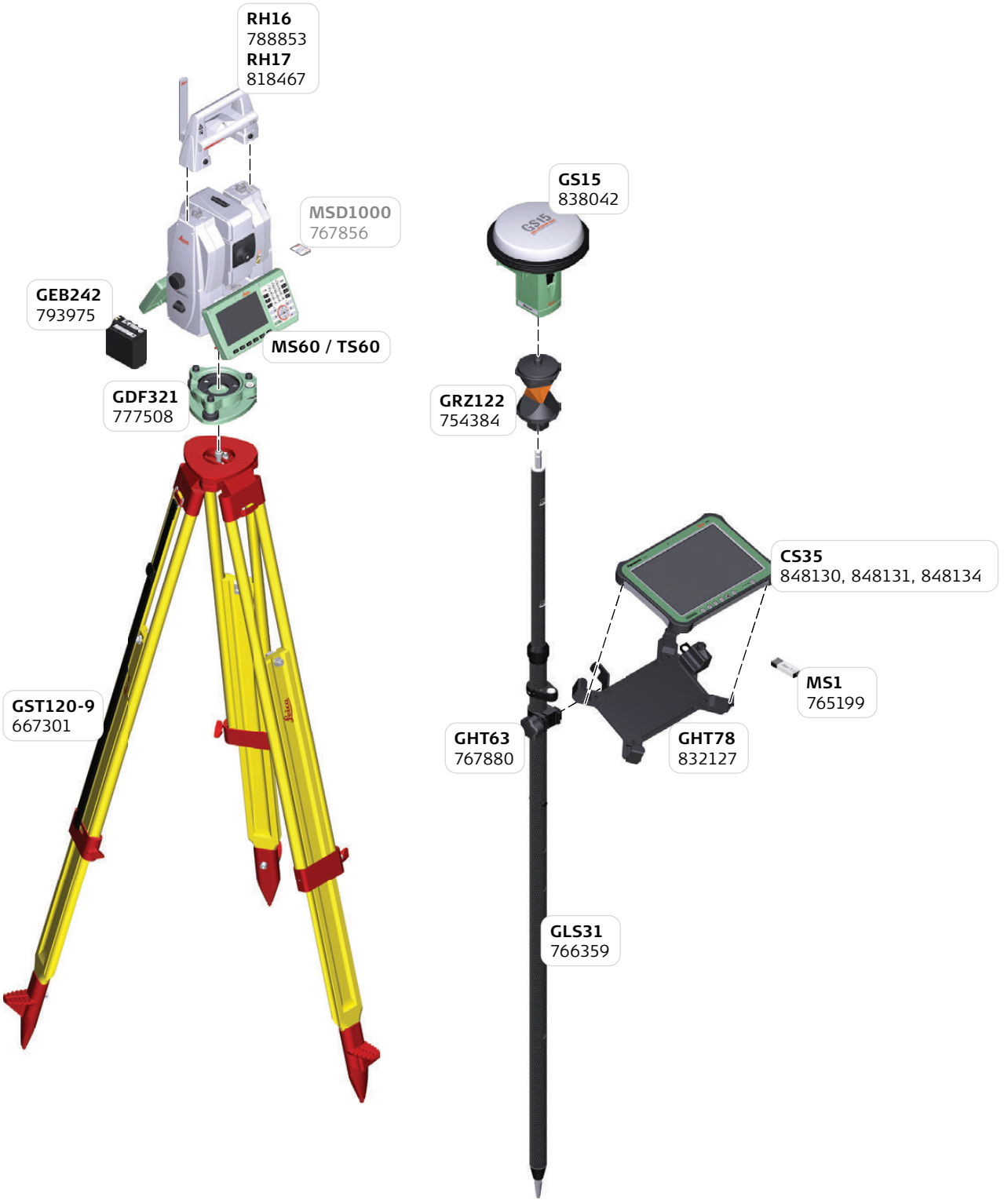

31 SmartStation

31.1 SmartStation using the GS16 GNSS Receiver

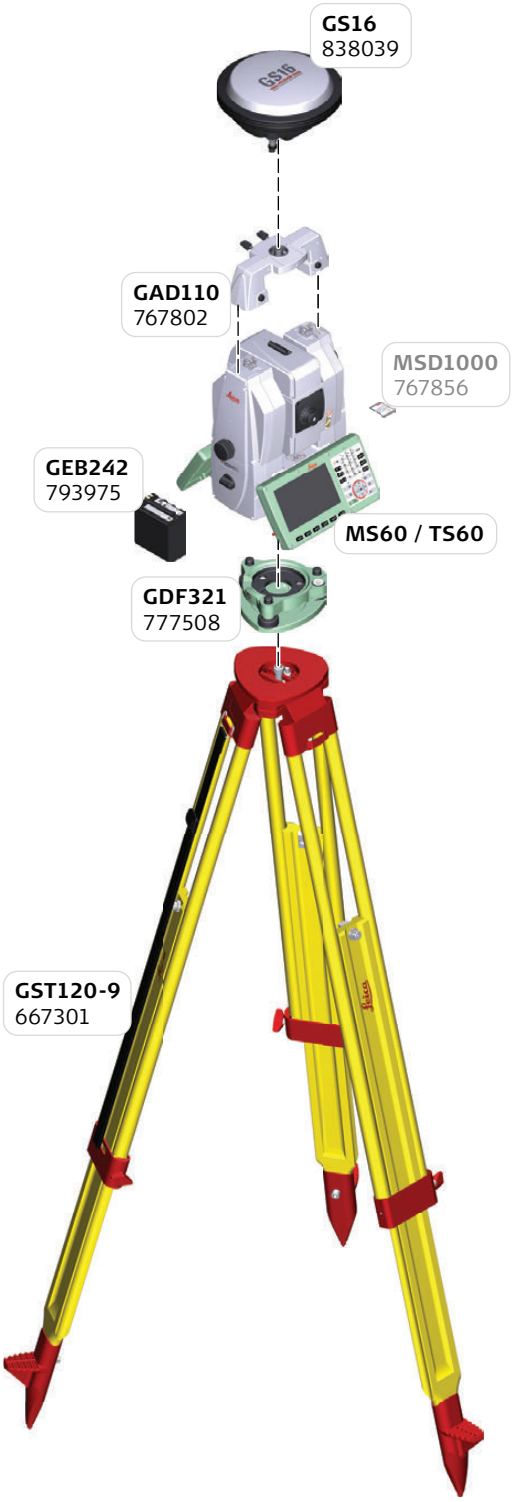

31.2 SmartStation using the GS15 GNSS Receiver

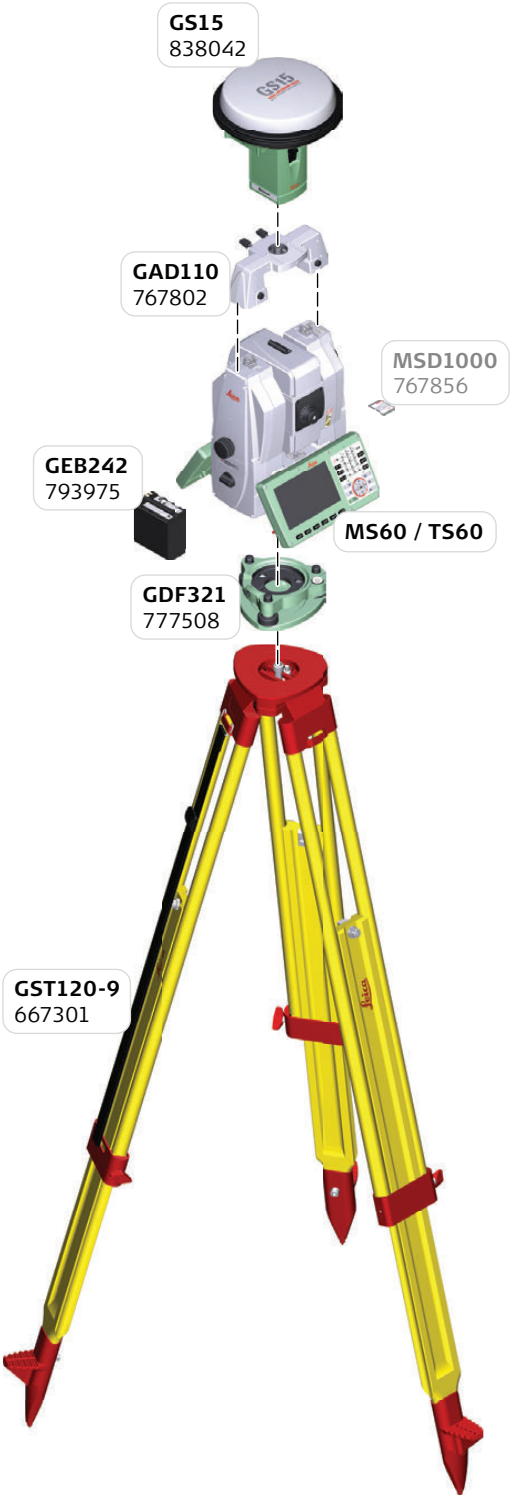

Revolutionising the world of measurement and survey for nearly 200 years, Leica Geosystems creates complete solutions for professionals across the planet. Known for premium products and innovative solution development, professionals in a diverse mix of industries, such as surveying and engineering, safety and security, building and construction, and power and plant, trust Leica Geosystems to capture, analyse and present smart geospatial data. With the highest-quality instruments, sophisticated software and trusted services, Leica Geosystems delivers value every day to those shaping the future of our world.

Leica Geosystems is part of Hexagon (Nasdaq Stockholm: HEXA B; hexagon.com), a leading global provider of information technologies that drive quality and productivity improvements across geospatial and industrial enterprise applications.

Illustrations, descriptions and technical specifications are not binding and may change.
Printed in Switzerland - Copyright Leica Geosystems AG, Heerbrugg, Switzerland, 2017.
837008 - 1.5.0en - II.17

Leica Geosystems AG
Heinrich-Wild-Strasse
CH-9435 Heerbrugg
Switzerland
Phone +41 71 727 31 31
www.leica-geosystems.com

- when it has to be **right**

Leica Geosystems